| A03-T021-PROFILE | | |

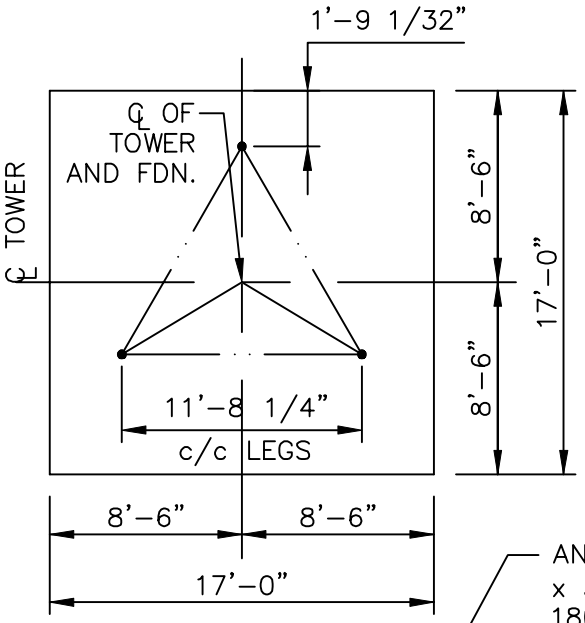

PLAN

NOTES:

1. ALL CONCRETE SHALL HAVE A MINIMUM COMPRESSIVE STRENGTH OF 3000 PSI @ 28 DAYS.

2. REINFORCING STEEL SHALL CONFORM TO THE REQUIREMENTS OF ASTM A615 (GRADE 60).

3. TOTAL CONCRETE = 42.9 CUBIC YARDS.

4. FOUNDATION DESIGN BASED UPON THE FOLLOWING:

ALLOW BEARING PRESSURE: 2000 PSF
UNIT WEIGHT: 100 PCF
WATER AND ROCK LOCATED BELOW FOOTING

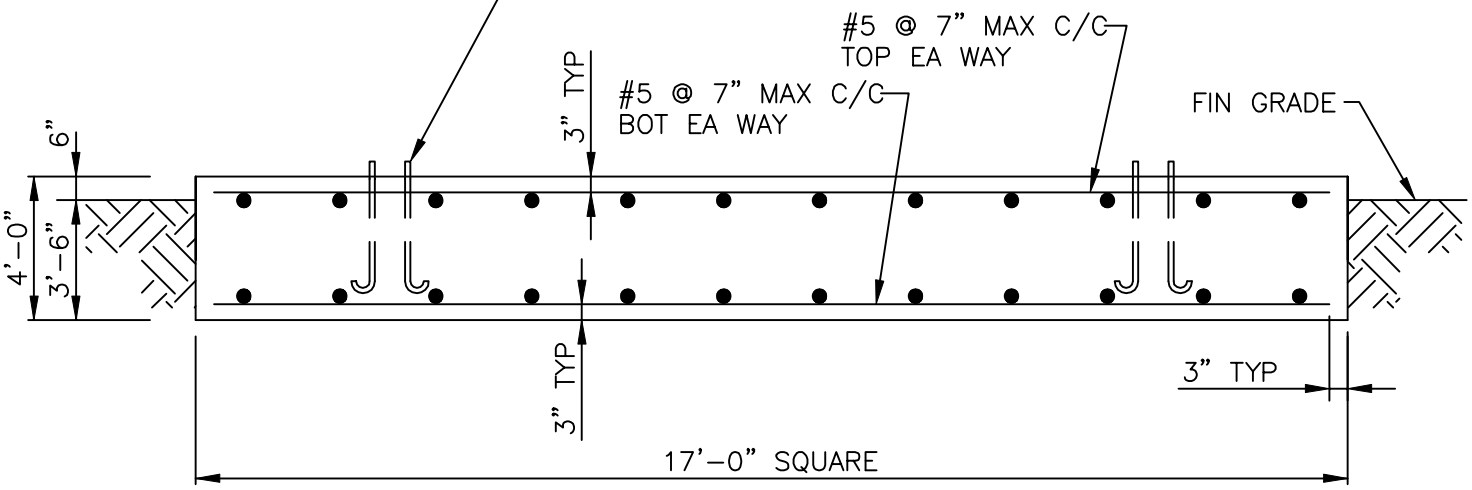

MAT FOUNDATION

FOOTING MUST BEAR ON UNDISTURBED SOIL OR COMPACTED BACKFILL.

AMERICAN TOWER COMPANY
ISO 9001-2000
P.O. Box 29 Shelby, Ohio 44875
www.amertower.com
info@amertower.com
Since 1953
Telephone (419)347-1185
Fax (419) 347-1654

160' HEAVY FOUNDATION

BY: DOW | DATE: 12/21/02

DWG NO. 1053 A