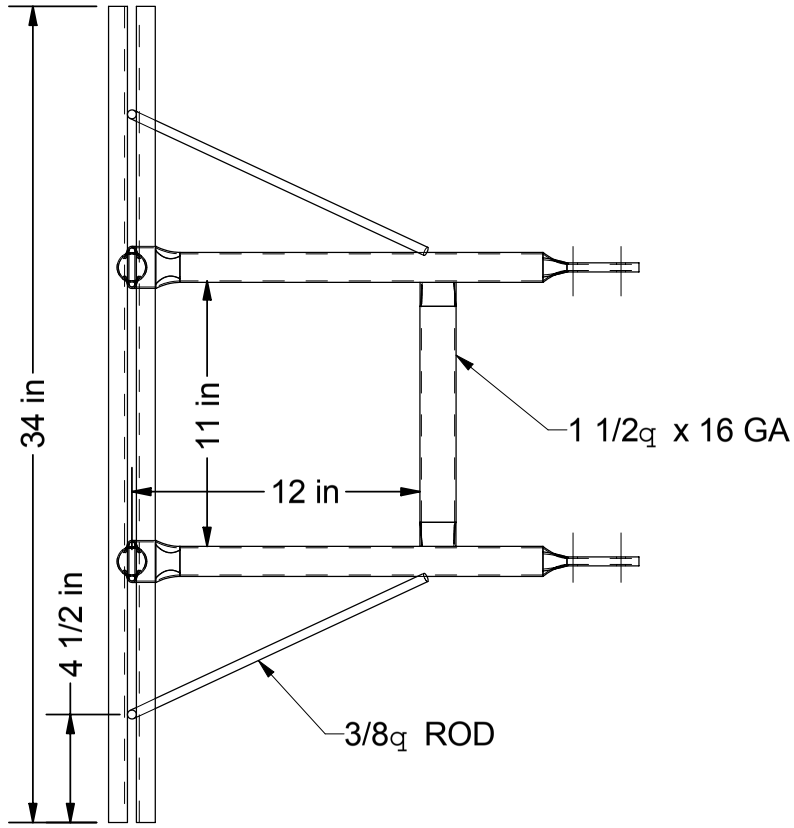

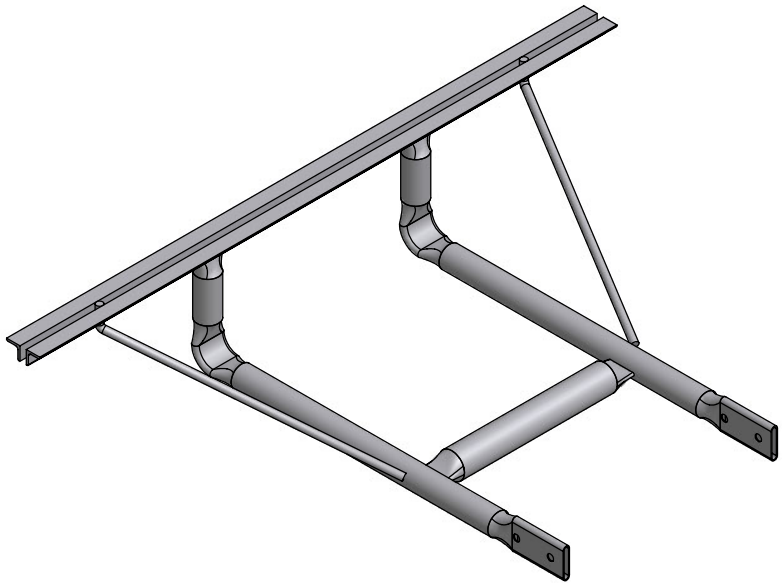

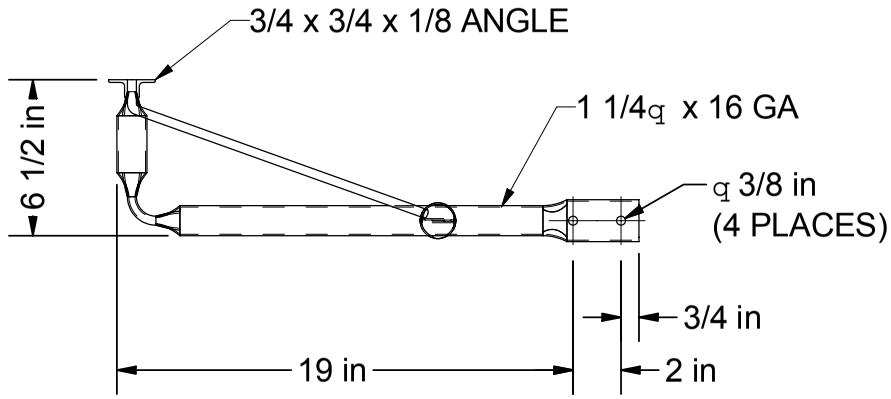

AMERICAN TOWER COMPANY
ISO 9001-2000
P.O. Box 29 Shelby, Ohio 44875
info@amertower.com
Telephone (419) 347-1185
www.amertower.com
Since 1953
Fax (419) 347-1654

TITLE
RB 117 HOUSE BRACKET
(UNDER EAVE BRACKET)

SIZE		DWG NO	REV
A		1117	

DRAWN BY:	DOW	DATE 6/14/2003